# Reconfigurable All-Optical Multilogic Gate (XOR, AND, and OR) Based on Cross-Phase Modulation in a Highly Nonlinear Fiber

Jifang Qiu, Kai Sun, Martin Rochette, *Member, IEEE*, and Lawrence R. Chen, *Senior Member, IEEE*

***Abstract*—We demonstrate a simple all-optical multilogic gate based on cross-phase modulation. Digital logic operations including XOR, AND, and OR of two input data signals are demonstrated using a single device. We obtain error-free performance at 10 Gb/s and the receiver sensitivity for a bit-error rate of $10^{-9}$ is below −15.0 dBm. Power penalties for XOR, AND, and OR logic operations are 5.9, −1.0, and 2.9 dB, respectively.**

***Index Terms*—All-optical logic, all-optical signal processing, cross-phase modulation (XPM), highly nonlinear fiber (HNLF), optical communications.**

## I. Introduction

THE development of future broadband telecommunication networks requires all-optical technologies such as add–drop multiplexing, packet synchronization, clock recovery, address recognition, and signal regeneration in order to avoid optoelectronic conversions and overcome electronic bottlenecks. High-speed all-optical logic gates are key elements to realize all-optical functions.

So far, all-optical logic gates are typically implemented using nonlinear effects in semiconductor optical amplifiers (SOAs) [1] or in highly nonlinear fibers (HNLFs) [2]. Although, SOAs exhibit high gain and are compact and integratable, the performance of SOA-based logic gates is constrained by the SOA's intrinsic slow gain recovery time, which causes unwanted pattern effects and limits the operation speed. To overcome these limitations, HNLF-based all-optical logic gates are desirable because of the ultrafast response time of Kerr-based nonlinear effects (<100 fs). In addition, the ability to reconfigure all-optical functions is highly appealing as it can provide increased flexibility for networking operations.

Manuscript received January 24, 2010; revised March 11, 2010; accepted May 09, 2010. Date of publication May 24, 2010; date of current version July 21, 2010.

J. Qiu was with the Photonic System Group, McGill University, Montreal, QC, Canada, as a Joint Ph.D. student from Institution of Optical Communication and Photonics, Beijing University of Posts and Telecommunications, Beijing 100876, China (e-mail: qiujifang@gmail.com).

K. Sun was with the Photonic System Group, McGill University, Montreal, QC, H3A 2A7, Canada. He is now with Optiwave System Inc., Ottawa, ON, K2E 7X1, Canada (e-mail: sunkaiking@gmail.com).

M. Rochette and L. R. Chen are with the Photonic System Group, McGill University, Montreal, QC, H3A 2A7, Canada (e-mail: martin.rochette@mcgill.ca; lawrence.chen@mcgill.ca).

Color versions of one or more of the figures in this letter are available online at http://ieeexplore.ieee.org.

Digital Object Identifier 10.1109/LPT.2010.2050876

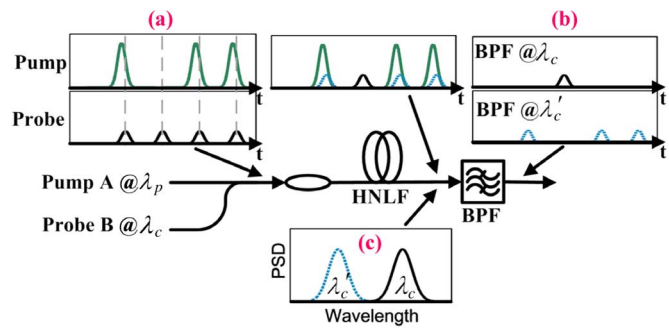


Fig. 1. Illustrating the principle of operation: (a) input signal waveforms, (b) output waveform associated with the probe signal, and (c) optical spectrum of the probe signal.

Therefore, we proposed a simple multilogic gate based on cross-phase modulation (XPM) in an HNLF [3]. We realized exclusive-OR (XOR), AND, and OR logic operations at 10 Gb/s using a single device and under the same input operating conditions. The reconfigurability between the three logic operations was achieved solely by adjusting the center wavelength of the bandpass filters (BPFs) [4]. Because we only use one nonlinear effect (i.e., XPM), the experiment is easy to control. Moreover, we only used two input data signals, thereby avoiding the need for additional sources such as a continuous-wave (CW) [5] or a clock signal. However, we did not achieve error-free operation in [3]. We have since modified our setup and in this letter, we report error-free operation and bit-error-rate (BER) measurements, as well as provide a more detailed discussion of the operating parameters which are key information that would be of interest to the research community.

## II. Principle of Operation

The principle of operation is illustrated in Fig. 1. Two synchronized 10-Gb/s return-to-zero on–off-keying (RZ-OOK) signals ($A$ and $B$) comprising picosecond pulses are launched into a length of HNLF. Signal $A$ which has higher power acts as a pump, while signal $B$, centered at $\lambda_c$ and having lower power, acts as a probe. After propagating through HNLF, the spectrum of probe B experiences an XPM-induced frequency shift which is proportional to the slope of the power profile of the pump signal [6]. The probe spectrum after the HNLF is composed of two lobes: one lobe at $\lambda_c$ is identical to the probe spectrum before XPM which is formed by the logical zeros of pump A, and a second lobe at $\lambda_c'$ is a spectrally shifted replica of the probe spectrum, which is formed by the logical ones of pump A, as shown in Fig. 1(c). Note that the second lobe can be red-shifted

1041-1135/$26.00 © 2010 IEEE

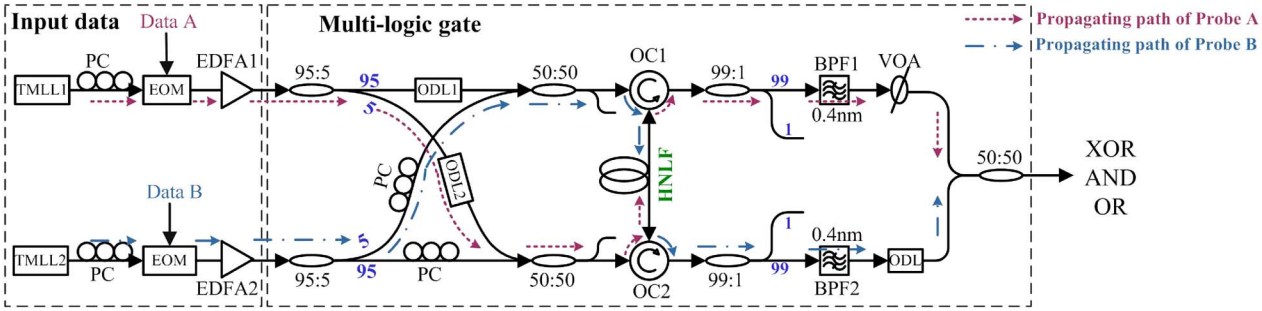


Fig. 2. Experimental setup. TMLL: tunable mode-locked laser, PC: polarization controller, EOM: electrooptical modulator, EDFA: erbium-doped fiber amplifier, ODL: optical delay line, OC: optical circulator, HNLF: highly nonlinear fiber, BPF: bandpass filter, VOA: variable optical attenuator.

TABLE I
DIFFERENT LOGIC RESULTS

| Logic Output | Combinations |
|---|---|
| XOR | $\overline{A}\cdot B+A\cdot\overline{B}$ |
| OR | $A+\overline{A}\cdot B$ or $B+A\cdot\overline{B}$ |
| AND | $A\cdot B$ after BPF1, $A\cdot B$ after BPF2, or their sum |

TABLE II
WAVELENGTH SETTINGS OF BPF1 AND BPF2 FOR DIFFERENT LOGIC OUTPUT

| $\lambda_A$ = 1555.24 nm, $\lambda_B$ = 1541.32 nm | | |
|---|---|---|
| Logic | $\lambda_{BPF2}$ | $\lambda_{BPF1}$ |
| XOR | 1541.40 nm | 1555.08 nm |
| AND | 1538.32 nm | 1558.52 nm |
| OR | 1541.40 nm | 1555.08 nm |

and blue-shifted, depending on which edge of the pump signal is superimposed on the probe signal.

As can be seen in Fig. 1(b) and (c), if a BPF removes the spectral components that are shifted by XPM and keeps the original frequency components at wavelength $\lambda_c$, then the logic operation $\overline{A}\cdot B$ is performed. On the other hand, if the BPF removes the original frequency components and keeps the XPM-shifted spectral components at $\lambda_c'$, then the logic operation $A\cdot B$ is performed. Additionally, if pump A and probe B are not synchronized, there will be no XPM-induced spectral shift for probe B. In this case, signal $B$ at the output of the BPF is centered at $\lambda_c$, which leads to the logic operation OR. Using a second branch similar to that described above, except with the reversed roles for signals $A$ and $B$ (i.e., $A$ serves as a probe while $B$ serves as a pump), we can obtain the logic operations $A\cdot\overline{B}$ and $A\cdot B$. Finally, as shown in Table I, with different combinations of the above logic operations, we can achieve all of the following operations: XOR, AND, and OR.

## III. EXPERIMENT AND RESULTS

Fig. 2 shows the experimental setup which only uses commercially available fiber pigtailed components. The HNLF has a length of 1007 m (the length was constrained by availability in the laboratory), nonlinearity coefficient of 12.5 $W^{-1}\cdot km^{-1}$, chromatic dispersion of $-0.69$ ps/nm·km at 1550.0 nm, and dispersion slope of 0.0074 ps/nm$^2\cdot$km at 1550.0 nm. The two signals ($A$ and $B$) comprising pulses with a full-width at half-maximum (FWHM) pulsewidth of 3.1 ps are generated by two tunable mode-locked lasers modulated by a $2^7-1$ PRBS using two independent $LiNBO_3$ modulators. The center wavelengths of signals $A$ and $B$ are 1555.2 and 1541.3 nm, respectively. After amplification, signals $A$ and $B$ are divided into two separated paths by two 95/5 couplers and subsequently recombined using two 50/50 couplers. 95% of the power from signal $A$ (acting as the pump with a power of 17.2 dBm) and 5% of the power from signal $B$ (acting as the probe with a power of 3.0 dBm) copropagate *downwardly* through the HNLF via an optical circulator (OC1); likewise, 5% of the power from signal $A$ (acting as the probe with a power of 3.3 dBm) and 95% of the power from signal $B$ (acting as the pump with a power of 17.6 dBm) copropagate *upwardly* through the HNLF via another circulator (OC2). The variable optical delay lines (ODLs) and polarization controllers (PCs) between the 95/5 couplers and 50/50 couplers are used for synchronization purposes and to maximize XPM, respectively. After BPF1 and BPF2, a third ODL and a variable optical attenuator (VOA) are used to synchronize the pulses as well as to equalize their power before recombination. By adjusting the center wavelengths of BPF1 and BPF2, multilogic results are achieved without changing the input variables (e.g., power, wavelength, and polarization).

Table II gives the corresponding wavelength settings of BPF1 and BPF2 for the different logic operations. For the XOR operation, we used $A\cdot\overline{B}$ after BPF1 and $\overline{A}\cdot B$ after BPF2. For the AND operation, we can achieve $A\cdot B$ after BPF1, after BPF2, or at the combined output. For the OR operation, we use $A\cdot\overline{B}$ after BPF1 and $B$ after BPF2 (note that $B$ is achieved by additionally adjusting ODL1 to desynchronize signals $A$ and $B$). As shown in Fig. 3, XOR, AND, and OR logic gates are realized, and the eye diagrams are clearly open with extinction ratios (ERs) of 14.0, 22.2, and 16.5 dB, respectively (for AND operation, we show the results following BPF1), while the ERs are 19.4 dB for signal $A$ and 18.6 dB for signal $B$. All of the expected logic functions are realized with no obvious pattern effects. Note that although the output of the logic gate comprises pulses at different wavelengths, this is not problematic as they are not expected to be transmitted. In the spectral domain, we can see clearly the self-phase modulation effect experienced by pump signals in addition to the two obvious peaks associated with XPM-shifted spectral broadening, which are observed at the 1% outputs of 99 : 1 couplers after the optical circulators (see Fig. 4).

We also performed BER measurements, as shown in Fig. 5. We obtain error-free performance for all logic operations and the receiver sensitivity for a BER $=10^{-9}$ is below $-15.0$ dBm which confirms the high performance of our reconfigurable scheme and its suitability for applications in all-optical functions. Power penalties at a BER of $10^{-9}$ for XOR, AND, and OR

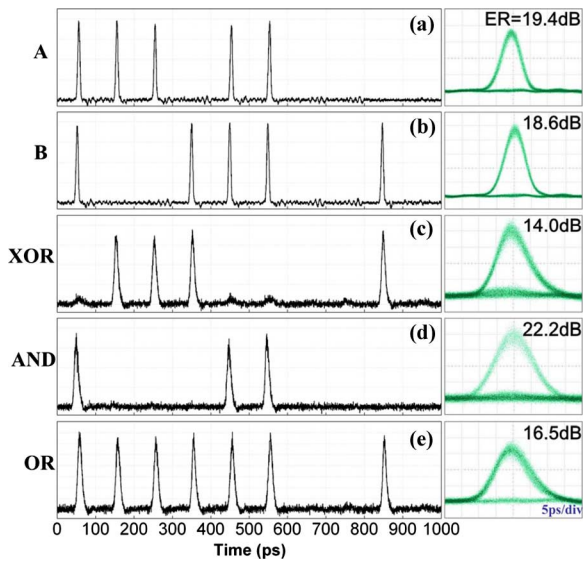


Fig. 3. Experimental results. Bit patterns and eye diagrams for (a) input A, (b) input B, (c) XOR gate output, (d) AND gate output, and (e) OR gate output after BPF2.

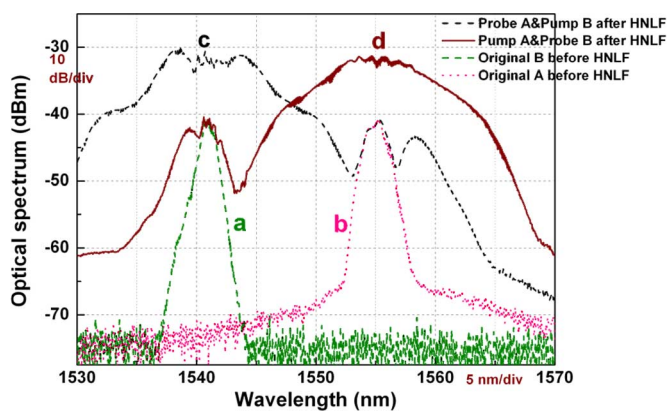


Fig. 4. Original spectrum of (a) signal $B$ and (b) signal $A$. Optical spectrum after HNLF of (c) combined probe A and pump B and (d) combined pump A and probe B (measured through 1% outputs of 99 : 1 couplers).

are 5.9, $-1.0$, and 2.9 dB, respectively. The negative power penalty for the AND gate is due mainly to a reduced mark ratio and the corresponding reduction in average power, while the higher power penalty for the OR gate is inherited from an increased mark ratio relative to the back-to-back setup. The gentle slope and floor for the XOR gate are due to the degraded ER arising from the combination of $\overline{A} \cdot B$ and $A \cdot \overline{B}$ which cumulates noise in the logic zeros.

Note that the wavelength separation between $A$ and $B$ is 14.0 nm. Actually there is a tradeoff in choosing the wavelength separation. Generally speaking, a larger separation is preferred, since the optical power can be increased to maximize XPM-induced broadening without causing an overlap between signals $A$ and $B$ due to SPM. On the other hand, because of chromatic dispersion, a larger separation will cause a quicker walk-off between the two signals, thus reducing XPM. In our case, we tried different wavelength separations to optimize the results (i.e., 14.0 nm).

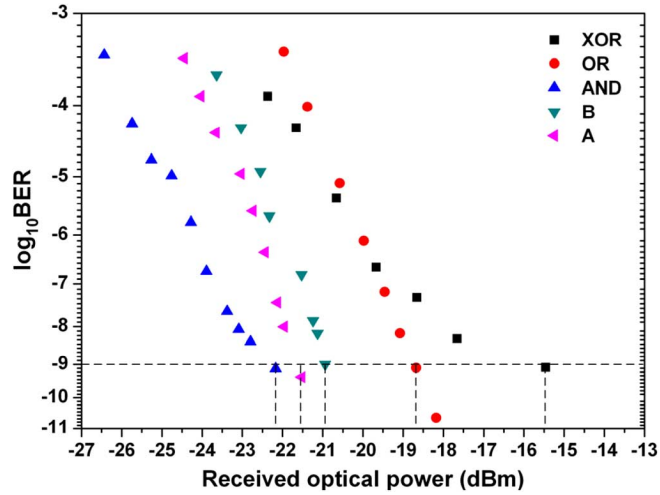


Fig. 5. BER measurements for multilogic operations and for input signals $A$ and $B$.

## IV. Conclusion

We have demonstrated a novel reconfigurable all-optical multilogic (XOR, AND, and OR) device operating at 10 Gb/s. The logic gate has a very simple structure which uses a single HNLF without any additional input such as a CW or clock. We obtain error-free performance, a receiver sensitivity less than $-15.0$ dBm for a BER $= 10^{-9}$, and power penalties of 5.9, $-1.0$, and 2.9 dB for XOR, AND, and OR operations, respectively. The length of HNLF can be optimized to minimize SPM effects and further improve overall performance. We believe that the gate should operate successfully beyond 100 Gb/s based on the fast time response of the Kerr effect, however, all other parameters such as BPF central wavelengths and bandwidths, optical peak powers, wavelength separation between signals, HNLF length, and chromatic dispersion have to be adjusted accordingly. In addition, the temporal alignment between the pump and probe signals would become more stringent.

## References

[1] J. H. Kim, Y. M. Jhon, Y. T. Byun, S. Lee, D. H. Woo, and S. H. Kim, "All-optical XOR gate using semiconductor optical amplifiers without additional input beam," *IEEE Photon. Technol. Lett.*, vol. 14, no. 10, pp. 1436–1438, Oct. 2002.

[2] C. Yu, L. Christen, T. Luo, Y. Wang, Z. Pan, L. S. Yan, and A. E. Willner, "All-optical XOR gate using polarization rotation in single highly nonlinear fiber," *IEEE Photon. Technol. Lett.*, vol. 17, pp. 1232–1234, Jun. 2005.

[3] K. Sun, J. F. Qiu, M. Rochette, and L. R. Chen, "All-optical logic gates (XOR, AND, and OR) based on cross phase modulation in a highly nonlinear fiber," in *Proc. ECOC'2009*, Vienna, Austria, Paper 3.3.7.

[4] D. M. F. Lai, C. H. Kwok, T. I. Yuk, and K. K. Y. Wong, "Picosecond all-optical logic gates (XOR, OR, NOT, and AND) in a fiber optical parametric amplifier," in *Proc. OFC'08*, San Diego, CA, Paper OML6.

[5] Z. Li, Y. Liu, S. Zhang, H. Ju, H. de Waardt, G. D. Khoe, and D. Lenstra, "All-optical logic gates based on an SOA and an optical filter," in *Proc. ECOC'05*, Glasgow, U.K., Tu 3.5.3.

[6] G. P. Agrawal, *Nonlinear Fiber Optics*. New York: Academic, 2007.